The Critical Path: What It Is and How To Utilize It

Introduction

A company is planning on making tables that consist of a drawer, four legs, and the tabletop. The legs take 11 hours to build, the top takes 3 hours to build, and the drawer takes 10 hours. After each part is built it is painted. The legs take 2 hours, top takes 1 hours, and the drawer 3 hours. The drawer is then attached to the top (1 hours). After the top and drawer are attached, the four legs are attached (1 hours). Your supervisor puts you in charge of making the decisions of what activities are going to take priority over others.

To solve this problem, the critical path must be used to determine what series of events in the most time-consuming. This system is made up of many activities that are assigned with a time, and these activities also must go in a specific order. After mapping out all of the activities in the system, the critical path can be determined. The critical path will be the most time-consuming path within the system, and this will help determine what activities must take priority over other activities to stay on a time schedule. This concept is extremely important when it comes to cutting cost within a company and keeping downtime to a minimum to maximize profit.

This document will provide everything that is needed to solve critical path problems. It will first go through each component of the critical path. After that, it will assist with creating the diagram and calculations from an example to solve for the critical path. Finally, it will take you through step-by-step instructions on how to solve for the critical path in the chair manufacturing company above.

Components of a Critical Path

To begin work with the critical path, it is important to understand each part or concept that applies when creating a chart.

- The **critical path** is the entire path through the diagram that will take the longest amount of time to complete. This sets the precedent of what time the whole process needs to be completed by and gives other shorter activities some slack time.

Figure 1

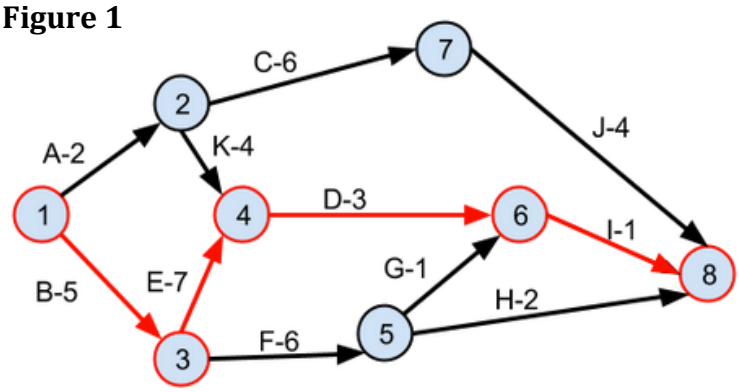

- **<u>Events</u>** take place at the nodes, the circles with numbers in them identifying which event is taking place at that time.

Figure 2

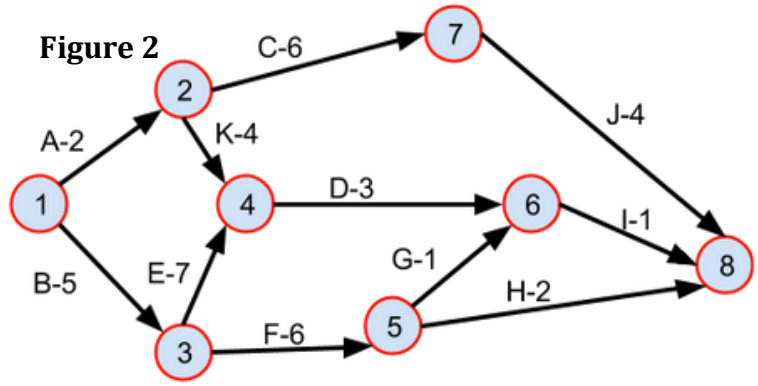

- **<u>Activities</u>** are the paths represented by arrows connecting each node to each other. The arrows point from the event that just took place to the event(s) that can now start because the event leading to it/them has finished. Each path is accompanied by a time. This is the time that it takes to complete the activity.

Figure 3

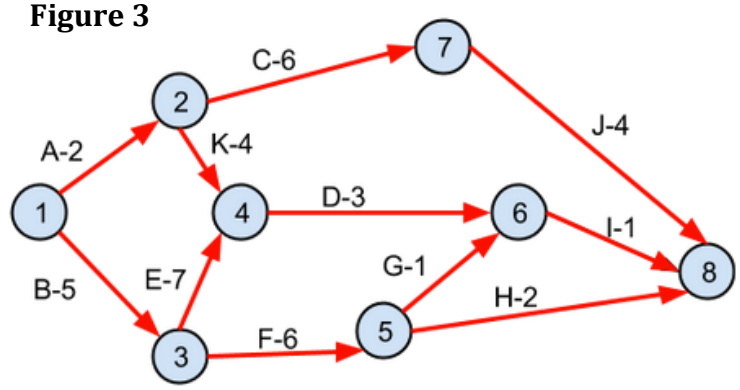

- The **<u>earliest start time</u>** is just what it says, the soonest time that an event can begin. This is calculated by starting from the beginning of the diagram and moving forward through it, adding up the activity times needing to be completed before it.

- The **<u>latest start time</u>** is the latest time that an activity can start to keep the whole system still on track to finish with the critical path (longest path through the system). This is calculated by working from the end of the diagram with the total time and subtracting the activity time(s) from that.

- **<u>Slack event time</u>** is the free time that an event has to stay on it's necessary time track. It is calculated by subtracting the earliest event time from the latest event time. All events that are involved in the critical path will have a slack time of 0 because there is no extra time available for that event.

- **<u>Slack activity time</u>** is similar to slack event time yet viewed in terms of the activities instead of the event nodes. All activities involved in the critical path will have a slack activity time of 0.

These concepts will be easier to apply when seen in an example situation accompanied by calculations.

Making the Critical Path

The critical path is the longest route usually measured in time for a series of activities that all relate to each other. For example, starting at Node 1 and ending at Node 8. There may be a few optional routes to the final node or there may be many routes. The critical path is defined as the route that takes the longest.

Step-by-step approach:

Figure 4

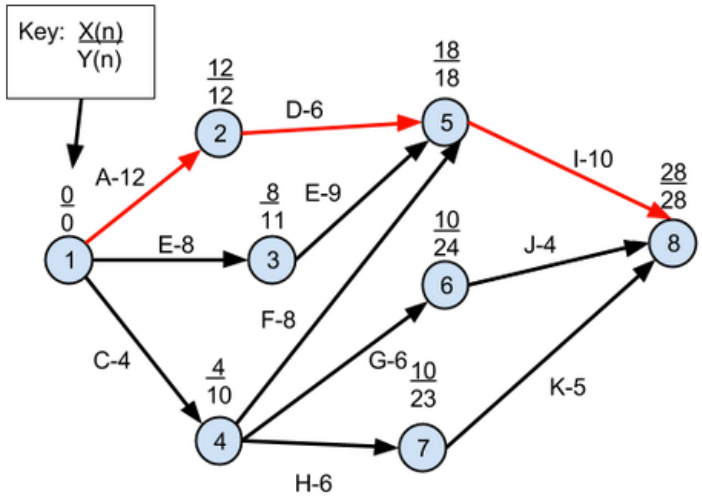

1. The first step in every critical path problem is defining your starting point and your ending point.
2. From here we want to follow the paths from each node to the next and view all the optional routes. The path from one node to another node is called an Activity.
3. Between each pair of nodes there will be an activity time. During this step we want to write down each activity time for every path in the system.
4. Once all your activities times are written down we can start finding the critical path or the longest path.
5. To do this, simply start at the beginning node and choose a path till you reach the ending node. Add all the activity times for that path together.
6. Continue doing this for all possible routes. Whichever route is the longest will be your critical path.
7. This path will define your bottom number (x/y)-(the y value) at each node. This means at your first node you will have (0/0). Since our path must begin here the y value is 0. Follow the critical path and at each node we will add the activity time to the bottom value. At the last node we will have the total time on the bottom.
8. For the critical path, both the top and bottom numbers will be identical just like the first node.
9. For the other paths we will simply count backwards from the end back to the beginning. (This will make more sense in the following problem)

10. The paths that are not part of the critical path will have a numerator smaller than the denominator. This difference between the numerator and denominator is your slack time to start each event or node. Remember that there is no slack time for any event or node on the critical path.

The following problem has been solved already, but it is good practice to try it for yourself. All the information you need is in the table and the visual representation is below that. Now there is also the Earliest Event Time (EET), Latest Event Time (LET), Slack Event Time (SET), and Slack Activity Time (SAT) to consider. These values are relatively easy to calculate once you have created the pictorial diagram such as the one below.

Key: x_1/y_1 = Node 1 0/0

EST$(Node\ 1)$ = Earliest time an event can start at node 1, the numerator (x_1)

Earliest Start Time $(EST) =$ $Start\ Time\ first\ node +$ $Activity\ time\ between\ nodes$

LET$(Node\ 1) =$ Latest time an event can start at node 1 but not delay the critical path (y_1)

Latest Start Time = *Earliest Start Time of the Next node - Activity Time between*

SET$(Node\ 1)$ = The Slack event time at node 1. This should be 0 because the first node is part of the critical path.

SET$(1) = LET(1) - EET(1)$

SAT$(Node\ 1)$ = The slack activity time at node 1. This should be 0 because the first node is part of the critical path.

Table 1

Activity	Start Node	End Node	Activity Time	Slack Activity Time
A	1	2	12	0
B	1	3	8	3
C	1	4	4	6
D	2	5	6	0
E	3	5	7	3
F	4	5	8	6
G	4	6	6	6
H	4	7	6	6
I	5	8	10	0
J	6	8	4	14
K	7	8	5	13

Table 2

Node Number	Earliest Event Time	Latest Event time	Slack Event Time
1	0	0	0
2	12	12	0
3	8	11	3
4	4	10	6
5	18	18	0
6	10	24	14
7	10	23	13
8	28	28	0

$$\textbf{Slack Activity Time} = LST\ end\ node - EST\ beginning\ node - Activity\ time\ between\ the\ nodes$$

As we see above, The Slack Event times for all nodes on the critical path are 0. These figures relate to the individual node instead of the movement from one node to the next (Slack Activity Time).

For the example problem above, the critical path is "A-D-I" since this path takes the longest time. The diagram below shows a pictorial way of representing the data. The red arrows are the critical path.

Interpretation of a Critical Path Diagram

A critical path diagram can be applied to a wide variety of events or activities. For example a critical path diagram could be used for a city evacuation plan. The way to interpret these diagrams is to think of the critical path as the most important to follow. Each activity in the critical path must be done in that order and all the other activities can be done during an activity on the critical path. This is what slack time is. Slack time describes how an event doesn't need to be completed immediately after the previous event. An example being during an evacuation of a city, the critical path might be moving the people on the highway towards safety (A-D-I). While at the same time, people in the suburbs need to be evacuated but since it does not take as long to move them, that event has slack time. From the above diagram, this would be like taking the path C-H-K. Essentially you can start each activity later.

The interpretation of these diagrams is a good way to convert real life situations into a mathematical approach to solve them.

Application of Critical Path

In many different situations there is a need to determine the critical path, and using the methods explained above it can be found. The activity time for each activity is obtained using a time study. A time study is a method used to obtain information about a process. It consists of measuring the time and rating of the worker to determine an accurate time for each activity. Many large manufacturers will have an employee that is responsible for completing time studies on all the steps of their manufacturing processes.

Example Application

A real life example of finding the critical path is as follows:

> A furniture making company builds tables that consist of a drawer, four legs, and the top of the table. Building legs takes 11 hours, building the top takes 3 hours, and building the drawer takes 10 hours. After each part is built, each part is painted. The legs take 2 hours, top 1 hour, and the drawer 3 hours. The drawer is then attached to the tabletop (1 hour). After the top and drawer are attached, the four legs can be attached (1 hour). Find the critical Path.

The solution to this problem is as follows:

1. First it must be determined what the starting point and ending point is. In this problem, the starting point would be starting to build all of the pieces. The ending point would be after the legs are attached. The events and activities must also be determined from the problem as well. Making a table like the tables below will help organize the problem.

Table 3

Activity	Start Node	End Node	Activity Time
A-Build Legs	1	2	11
B-Build Top	1	3	3
C- Build Drawer	1	4	10
D-Paint Drawer	4	5	3
E-Paint Top	3	5	1
F-Paint Legs	2	6	2
G-Attach Drawer to Top	5	6	1
H-Attach Legs	6	7	1

Table 4

Node	Earliest Event Time	Latest Event Time	Slack Event Time
1			
2			
3			
4			
5			
6			
7			

2. Create the network diagram from Table 1 and Table 2.

Figure 5

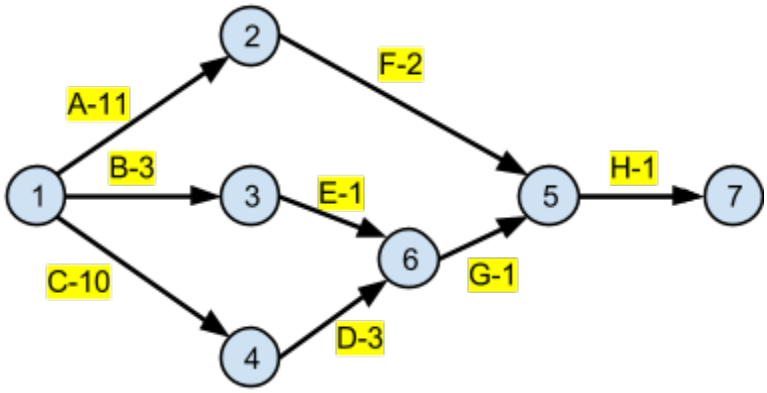

3. Calculate Earliest Start Time for each node. Be sure to start at the first node, and the earliest start time is zero. (Hint: For nodes with two activities going into it, the later of the two start times will be used.)

$$Earliest\ Start\ Time\ (EST) =$$
$$Start\ Time\ first\ node + Activity\ time\ between\ nodes$$

For example for Node 5:

Figure 6

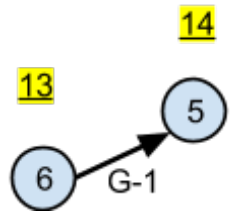

$$Earliest\ Start\ Time\ (EST) = 13 + 1 = 14$$

Table 5

Node	Earliest Event Time	Latest Event Time	Slack Event Time
1	0		
2	11		
3	3		
4	10		
5	13		
6	14		
7	15		

Figure 7

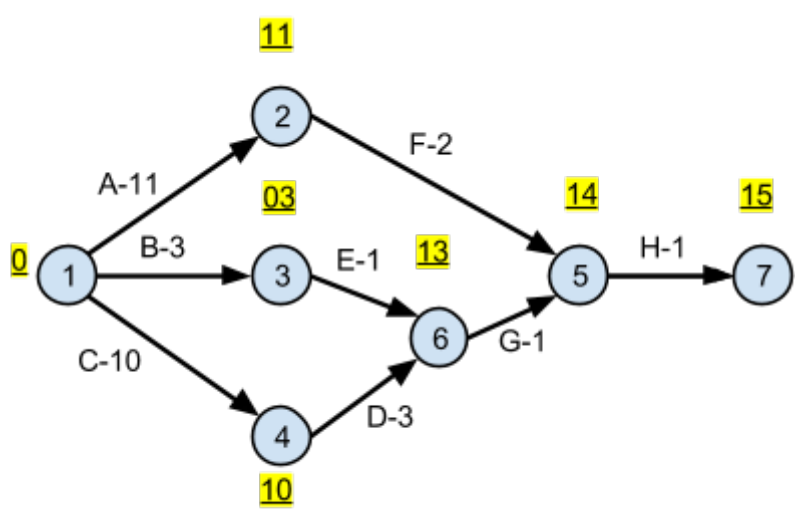

4. Calculate the latest event start time by starting at the last node and going backwards.

Latest Start Time = Earliest Start Time - Activity Time

For Example, Node 5.

Latest Event Time = 15 - 1 = 14

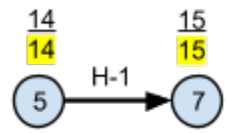

Figure 8

Table 6

Node	Earliest Event Time	Latest Event Time	Slack Event Time
1	0	0	
2	11	12	
3	3	12	
4	10	10	
5	13	13	
6	14	14	
7	15	15	

Figure 9

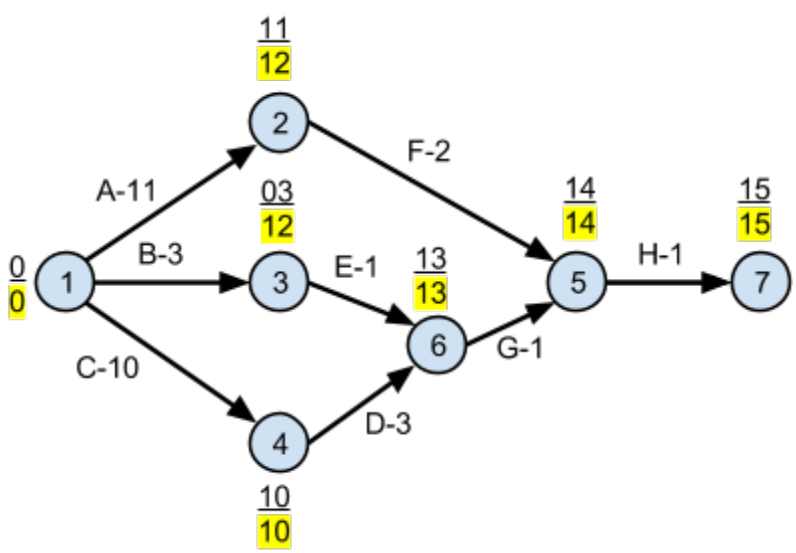

5. Calculate the slack event time for each node.

Slack Event Time = Latest Start Time - Earliest Start Time

Table 7

Node	Earliest Event Time	Latest Event Time	Slack Event Time
1	0	0	0
2	11	12	1
3	3	12	9
4	10	10	0
5	13	13	0
6	14	14	0
7	15	15	0

Figure 10

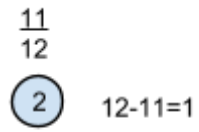

6. The activities that have the same number for the earliest start time and latest start time are the critical path nodes. Also, their slack event time will be zero. Figure 4 below shows the final diagram with the critical path.

Figure 11

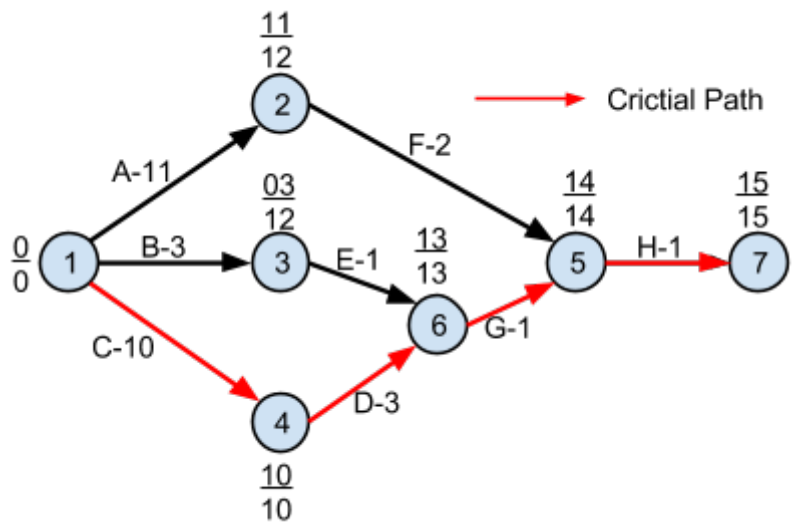

Conclusion

Finding the critical path has many complex steps involved, and this resource should put you in a good position to apply these concepts in many diverse situations. It has been an important topic for many years, and many large companies have used it to optimize their processes. The critical path can be used to determine the most time-consuming path to show what activities must be completed on a strict time frame and what activities have slack time in their schedule. Applying this method can help save companies millions and you could be the one responsible.

Glossary

Term	Definition
Critical Path	The most time consuming path within a system of events.
Nodes	Places on a critical path diagram indicating where events begin.
Paths	The arrows in a critical path diagram to show the movement of activities throughout the system.
Earliest Event Time	The time at which an event can first begin.
Latest Event Time	The time at which an event can start while still meeting the time criteria set by the critical path.
Slack time	The flexible time that an event has between its earliest event time and latest event time.
Time Studies	Systematic timings of activities, events, and process to create standardized timings for each of those.